Lexical Analysis (Practice)

ICS312

Machine-Level and Systems Programming

Henri Casanova (henric@hawaii.edu)

(q1) Write a Regex

- Write a regular expression for “All strings over alphabet {a,b,c} that consist of one or more a’s, followed by two b’s, followed by whatever string of a’s and c’s in any order”?

(q1) Solutions

- Write a regular expression for "All strings over alphabet {a,b,c} that consist of one or more a's, followed by two b's, followed by whatever string of a's and c's in any order"?

a+ b b (a | c)*

(q2) Select a Regex

- Which of the REs below correspond to “All strings over alphabet {a,b,c} such that they contain at least one of substrings ‘abc’ or ‘cba’”?
  - **#1:** (abc)+ | (cba)+
  - **#2:** (a | b | c)* (a | c) b (a | c) (a | b | c)*
  - **#3:** (a | b | c)* (a b c) (c b a) (a | b | c)*
  - **#4:** (a | b | c)* ((a b c) | (c b a)) (a | b | c)*
  - **#5:** (a* b* c* a b c a* b* c*) | (a* b* c* c b a* b* c*)
  - **#6:** ((a | b | c)* a b c (a | b | c)*) | ((a | b | c)* c b a (a | b | c)*)

(q2) Solutions

- Which of the REs below correspond to “All strings over alphabet {a,b,c} such that they contain at least one of substrings ‘abc’ or ‘cba’”?
  - **#1:** (abc)+ | (cba)+
  - **#2:** (a | b | c)* (a | c) b (a | c) (a | b | c)*
  - **#3:** (a | b | c)* (a b c) (c b a) (a | b | c)*
  - **#4:** (a | b | c)* ((a b c) | (c b a)) (a | b | c)*
  - **#5:** (a* b* c* a b c a* b* c*) | (a* b* c* c b a* b* c*)
  - **#6:** ((a | b | c)* a b c (a | b | c)*) | ((a | b | c)* c b a (a | b | c)*)

(q3) Write a Regex

- Write a RE for all binary strings that contain the substring 101 **or** the substring 000

(q3) Solutions

- Write a RE for all binary strings that contains the substring 101 **or** the substring 000

(0|1)* 101 (0|1)* |
(0|1)* 000 (0|1)*

(q4) Write a Regex

- Write a RE for all binary strings that contains the substring 101 **and** the substring 000

(q4) Solutions

- Write a RE for all binary strings that contains the substring 101 **and** the substring 000

(0|1)* 101 (0|1)* 000 (0|1)* |
(0|1)* 000 (0|1)* 101 (0|1)*

(q5) Pick the Regex

- Which of the REs below are for this automaton?

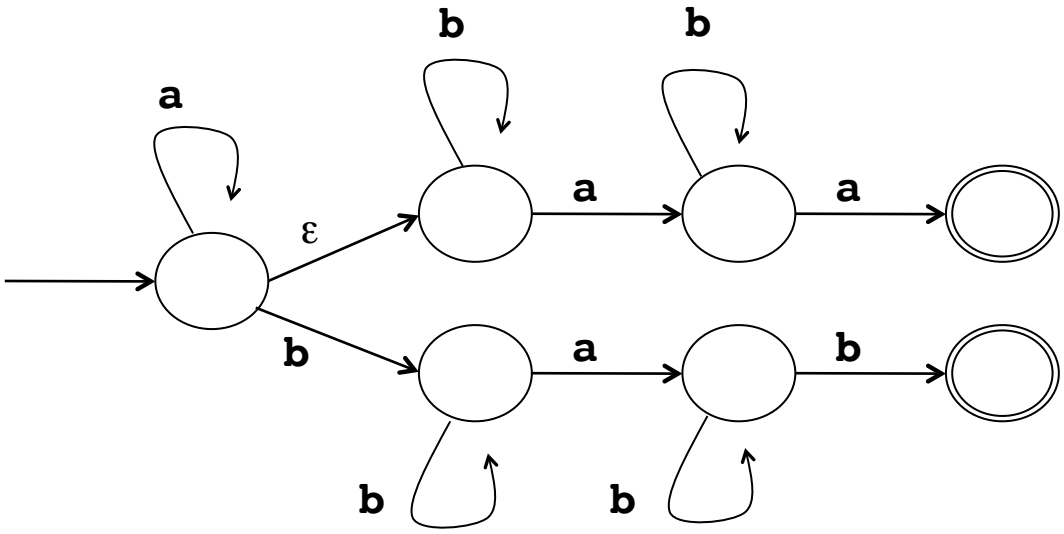

- #1: a* b* a b* a | a* b+ a b+
- #2: a* b* a b* a | a* b+ a b*
- #3: a* b+ a b* a | a* b+ a b+
- #4: a+ b* a | a* b+ a b+

(q5) Solutions

- Which of the REs below are for this automaton?

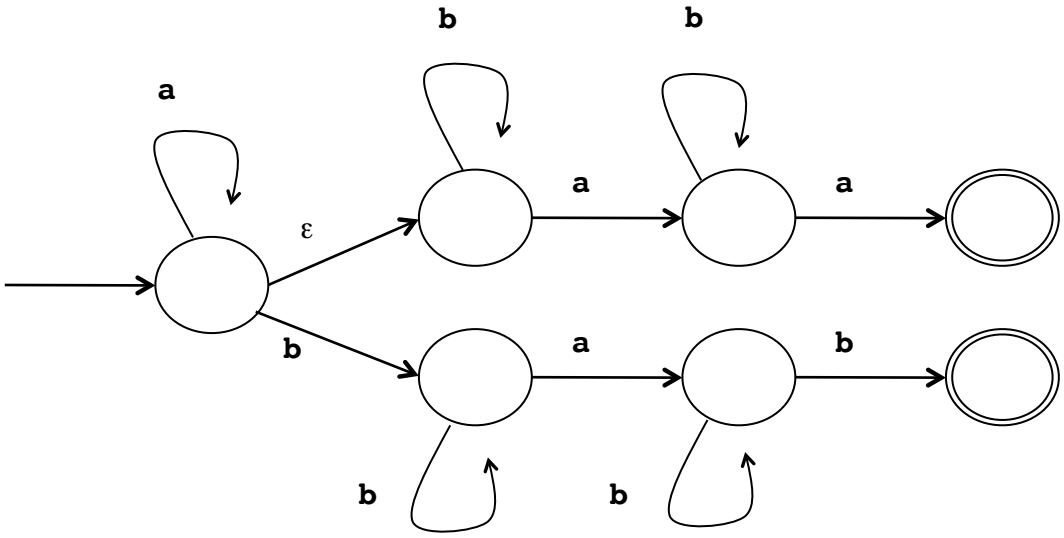

- #1: a* b* a b* a | a* b+ a b+
- #2: a* b* a b* a | a* b+ a b*
- #3: a* b+ a b* a | a* b+ a b+
- #4: a+ b* a | a* b+ a b+

(q6) Pick the Regex

- Which of the REs below are for this automaton?

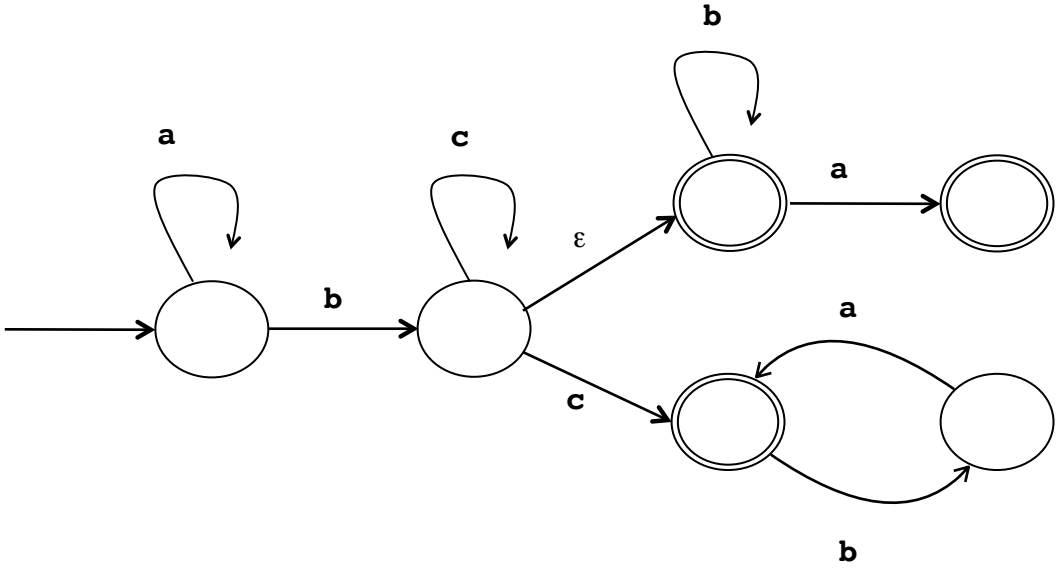

- #1: a* b c+ (b* | b* a | c b* a*)
- #2: a* b c* (b* a | c b* a*)
- #3: a* b c* (b* a? | c (b a)*)
- #4: a* b c* (b* a | c (b a)*)

(q6) Solutions

- Which of the REs below are for this automaton?

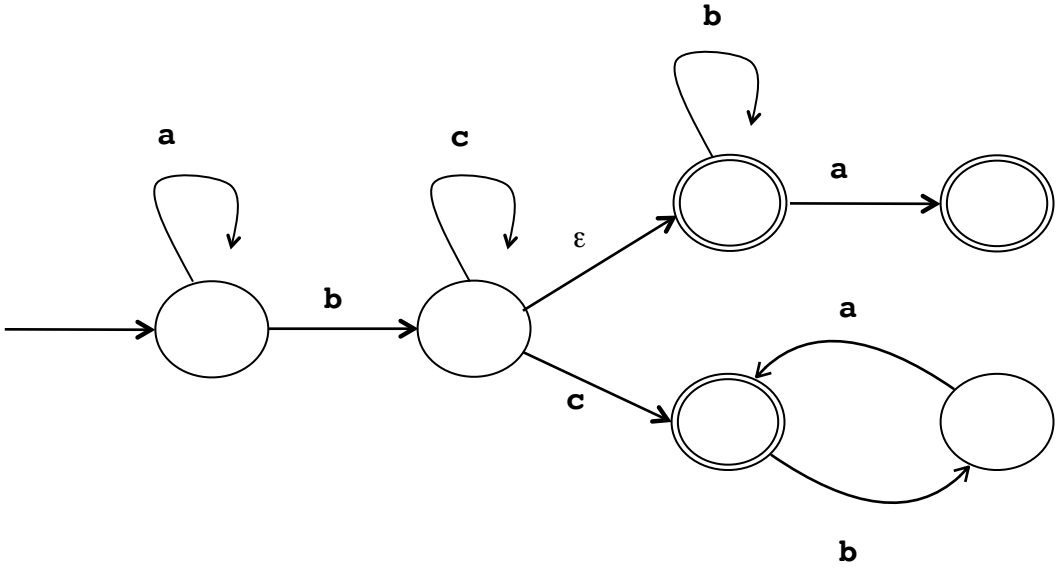

- #1: a* b c+ (b* | b* a | c b* a*)
- #2: a* b c* (b* a | c b* a*)
- #3: a* b c* (b* a? | c (b a)*)
- #4: a* b c* (b* a | c (b a)*)

(q7) Write a Regex

- Write an RE for this automaton

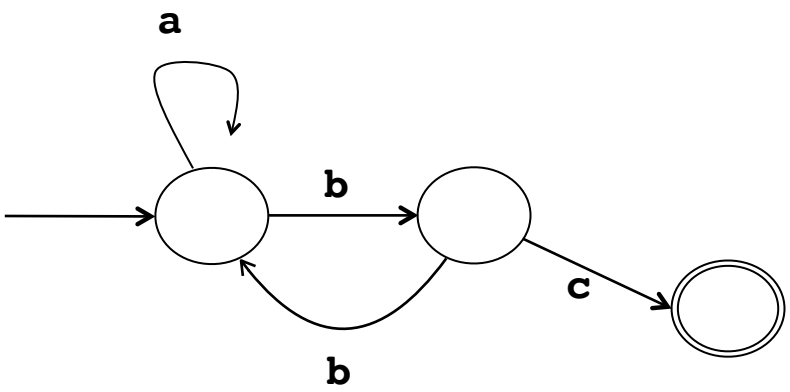

(q7) Solutions

- Write an RE for this automaton

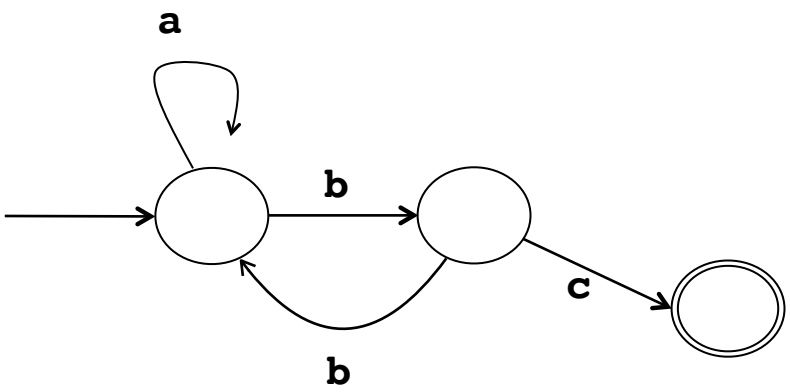

(a* bb)* a*b c

(q8) Write a Regex

- Write an RE for this automaton

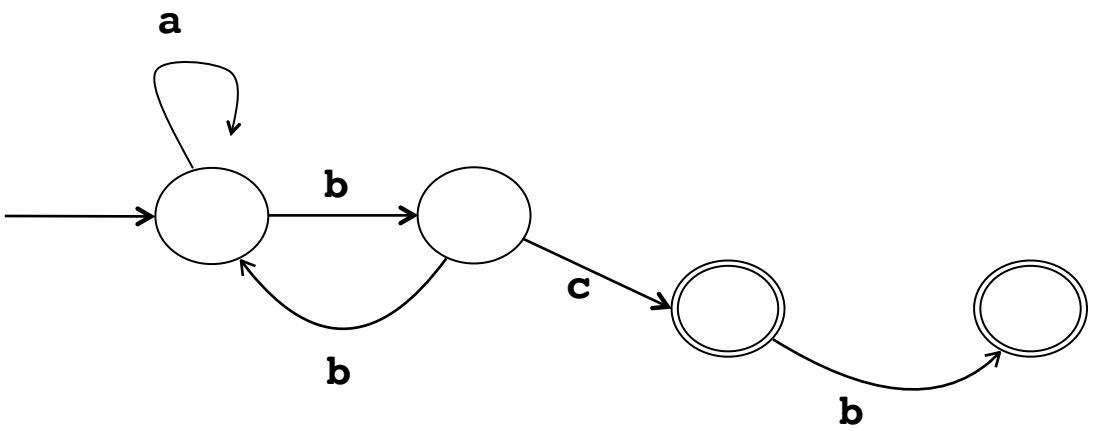

(q8) Solutions

- Write an RE for this automaton

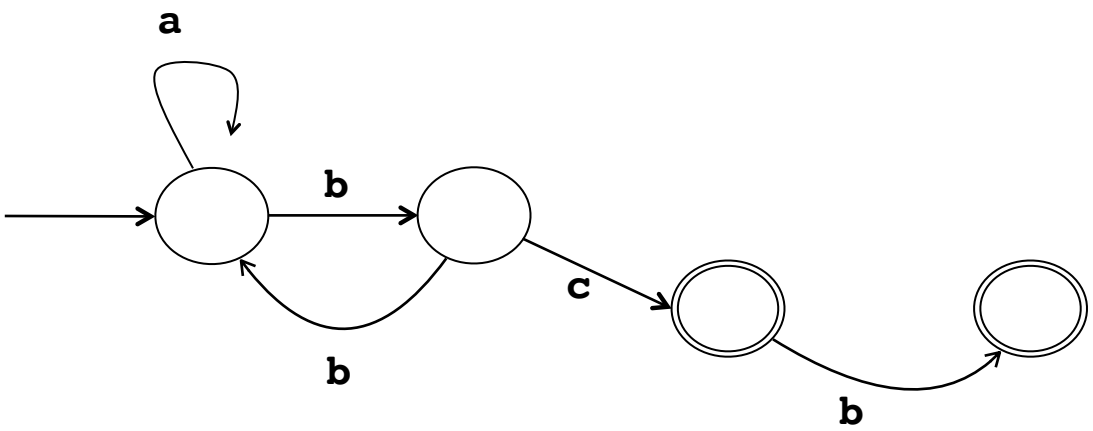

(a* bb)* a*b c b?

(q9) Write a Regex

- Write an RE for this automaton (not easy)

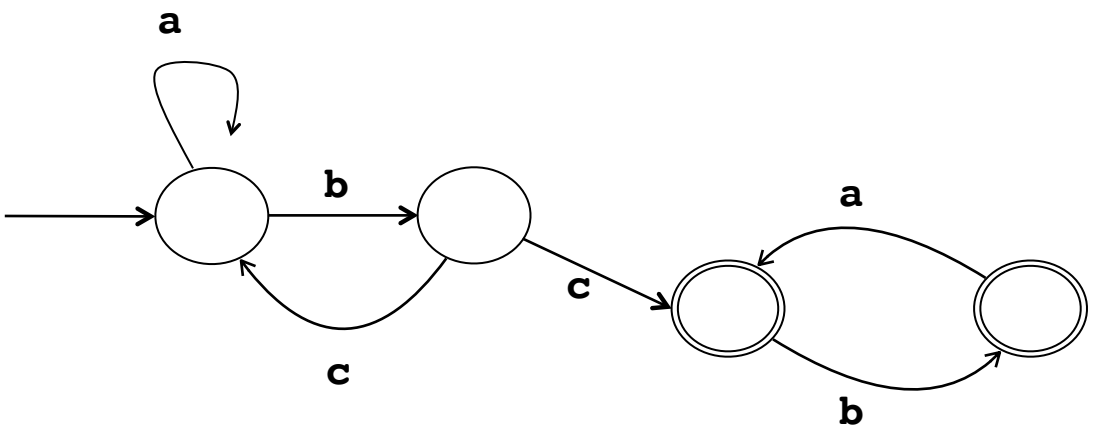

(q9) Solutions

- Write an RE for this automaton (not easy)

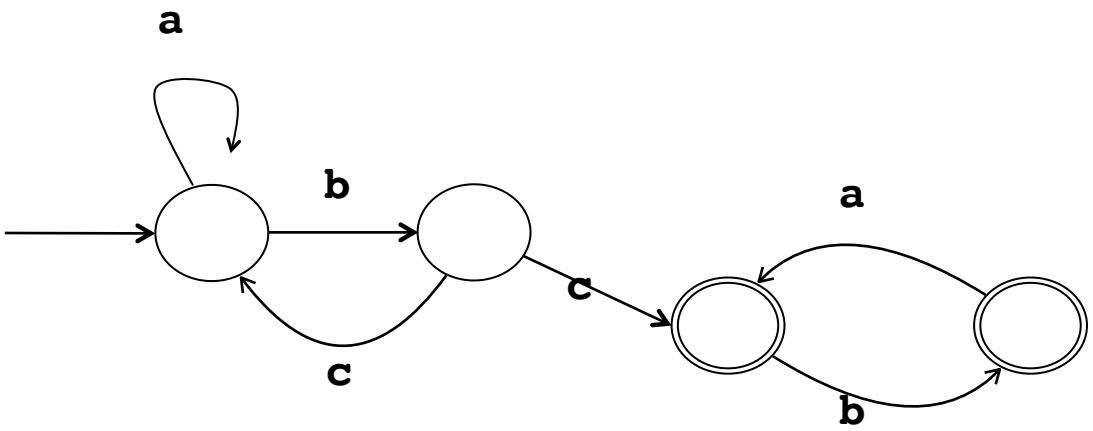

(a* b c)* a* b c (ba)* b?

(q10) Draw an NFA

- Draw the NFA for: $0^*1^+(0|1)0^*1$

(q10) Solutions

- Draw the NFA for: $0^*1^+(0|1)0^*1$

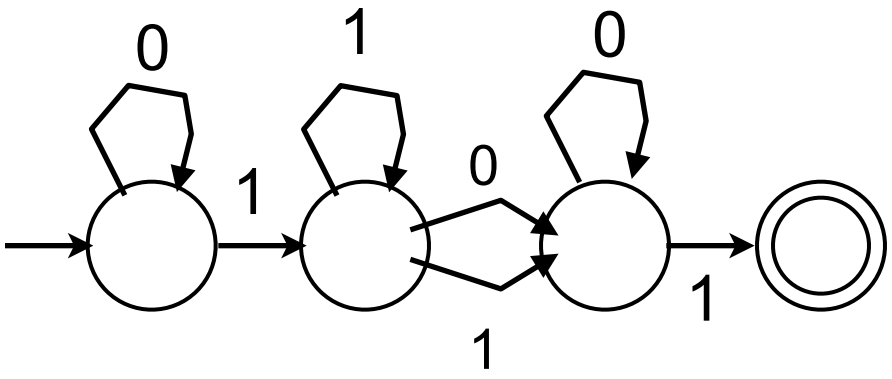

(q11) Write a Regex

- Write the RE for this NFA

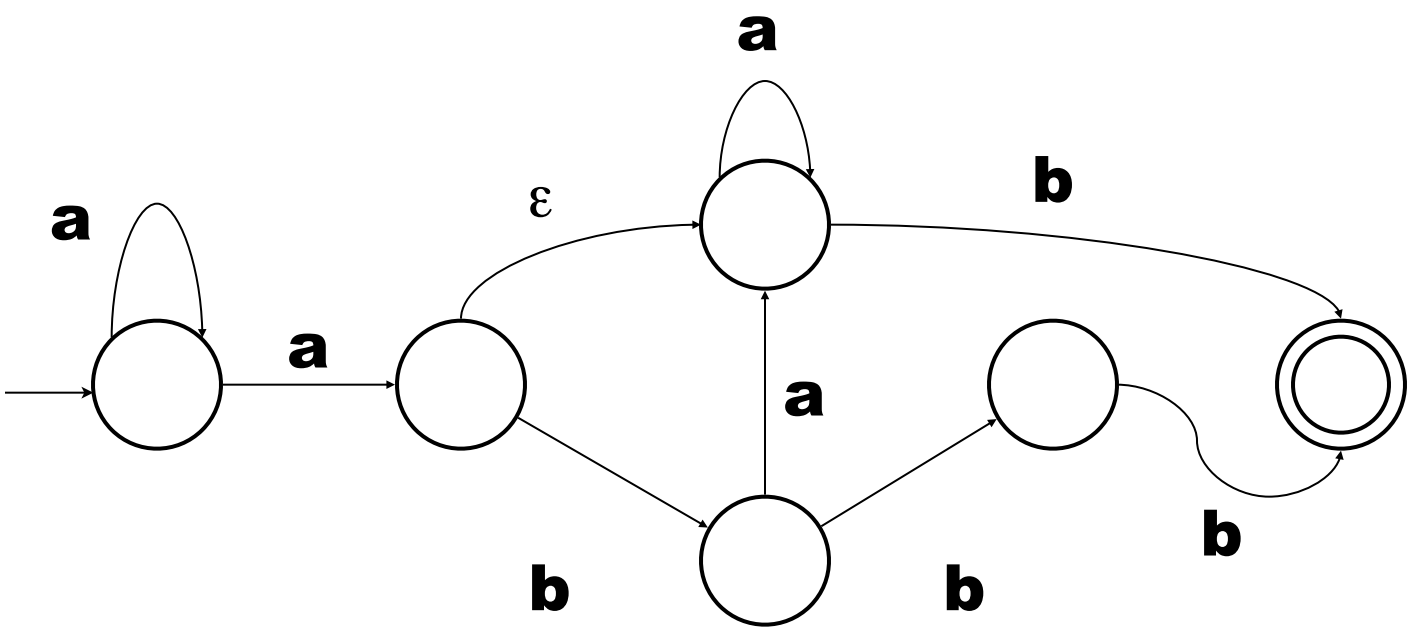

(q11) Solutions

- Write the RE for this NFA

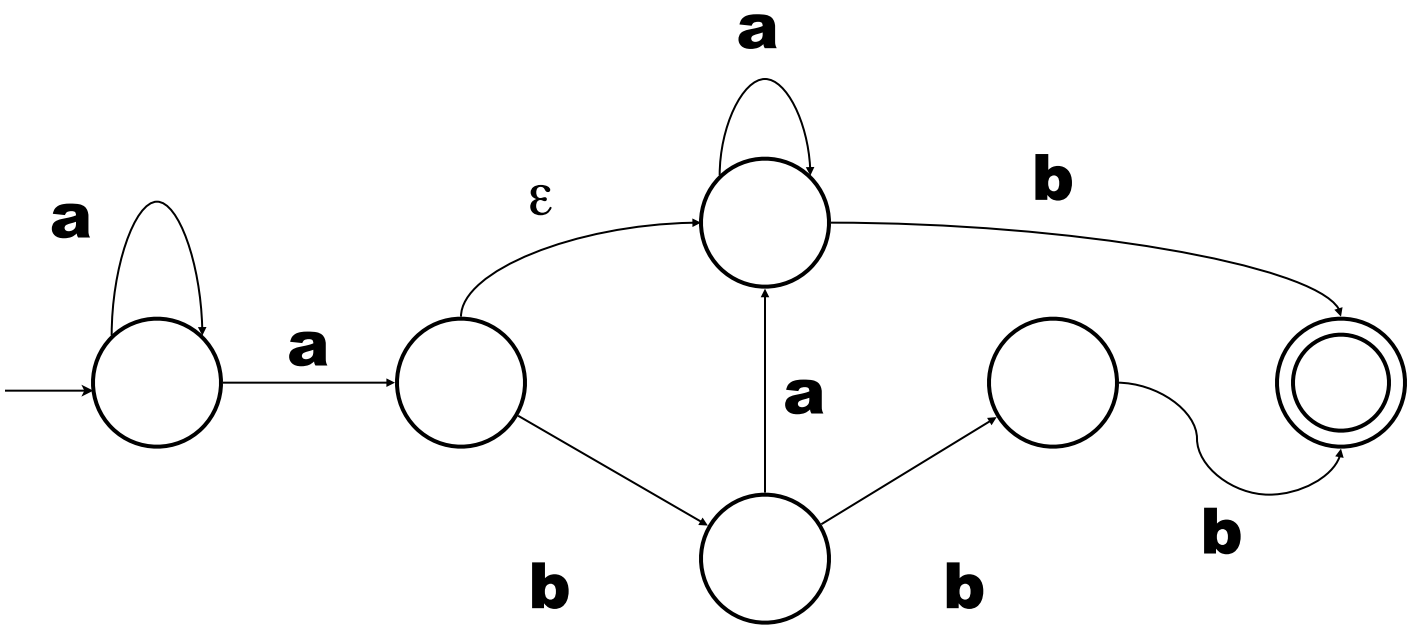

RE = $a^+a^*b \mid a^+ba^+b \mid a^+bbb$

= $a^+b \mid a^+ba^+b \mid a^+bbb$

= $a^+b(\varepsilon \mid a^+b \mid bb)$